ANDERSON GREENWOOD

Before installation these instructions must be fully read and understood.

1.1 General

The Anderson Greenwood Series 400 valve is designed for modulating action. The main valve will open at nameplate set, but only an amount proportional to the relieving capacity required. As process pressure increases, the valve will open more and be in full lift at 110% of set.

The main valve uses the principle of pressurizing the top or large area of a differential area piston with line pressure to hold the piston closed up to set pressure. At set pressure, the pilot relieves, depressurizing the volume above the piston, the main valve dome, and the piston lifts permitting discharge from the main valve. As capacity relief of the system is satisfied, system pressure will begin to decrease. When it does, the pilot will actuate and direct system pressure to the main valve dome. This closes the main valve.

The pilot is the non-flowing type. With the main valve open and relieving at steady pressure, no process gas or fluid flows through the pilot. When process pressure changes, the pilot actuates to change the lift of the main valve piston. During these actuations a small amount of gas or fluid from the main valve dome flows through the pilot and is discharged thru the pilot exhaust.

The set pressure range is 100 psig to 1480 psig.

1.2 Installation

Either or both inlet and outlet may be standard ANSI flanges or ANSI pipe threaded connections and are to be installed in accordance with accepted piping practices.

When remote pressure pick-up is used the pilot supply tube is connected to a remote location rather than to the inlet neck of the valve. A block valve in the remote pilot supply line is not recommended. If one is used it must be opened before pressurizing the main valve.

NOTE: Remote pressure pick-up piping must have the equivalent flow area of 3/8" tubing for lengths up to 100 feet. For lengths greater than this, consult factory.

1.3 Start-up

There must be pressure at the valve inlet or at the pilot inlet/sense port for valves with remote sense to establish a differential force across the piston and "load" it in the closed position. Pressure must pass through the pilot and exert force on the top of the piston. On normal plant start-up the valve will close itself as pressure increases.

Block valves are often used under safety valves to isolate them when maintenance is required. When putting the safety valve in service be sure the block valve is fully opened. If the block valve is opened after system start-up, the safety valve may briefly vent before the dome gets pressurized to close the main valve seat.

1.4 Maintenance

Anderson Greenwood recommended main valve and pilot maintenance procedures including pilot set pressure adjustment and valve assembly testing are described in the following paragraphs. Following these procedures in a regular pressure relief valve maintenance program appropriate for the specific operating conditions will ensure satisfactory valve performance and provide optimum service life.

Should the pressure/media requirements of a pilot operated pressure relief valve be outside the capabilities of the repair facility, contact Anderson Greenwood for specific instructions before starting any maintenance activity.

This manual is provided as a general guide for the maintenance of the safety valves described herein. It does not include procedures covering all valve configurations and variations manufactured by Anderson Greenwood. The user is advised to contact Anderson Greenwood or one of our authorized representatives for assistance with valve configurations and variations not covered in this manual.

tyco / Flow Control

Total Flow Control Solutions™

Engineering Doc. #05.9040.270 Rev. H

Copyright © 2008 Tyco Flow Control. All rights reserved.

Table of contents

1.0 General valve description and start-up 1
2.0 Main valve maintenance 3
3.0 Pilot maintenance 10
4.0 Pilot set pressure adjustment 17
5.0 Valve assembly testing 24
6.0 Pilot set pressure field test procedure 29
7.0 Soft goods repair kits 31
8.0 Pilot accessories 33
9.0 Assembly and maintenance equipment 33

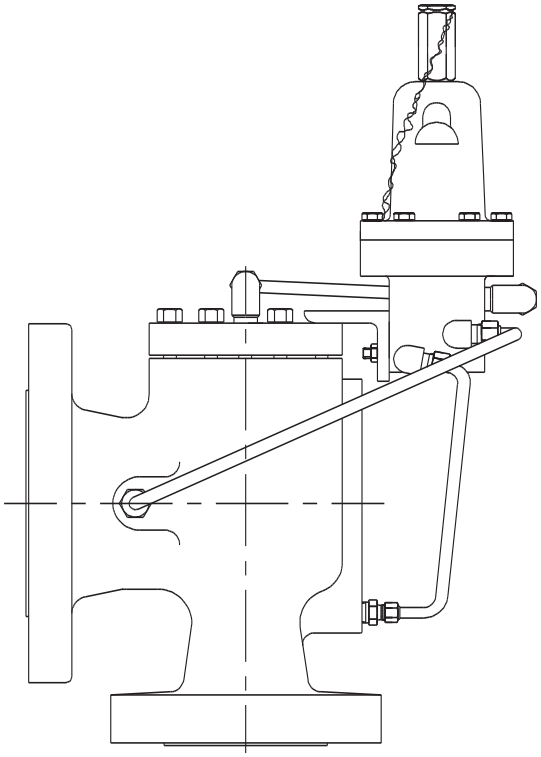

Engineering Doc. #05.9040.270 Rev. H

Copyright © 2008 Tyco Flow Control. All rights reserved.

2.0 Main valve maintenance

2.1 Disassembly

Before beginning disassembly, bleed off any pressure trapped in the main valve or pilot.

Refer to Figure 1A (piston/seat Type XX3) and Figure 1B (piston/seat Type XX9) for parts description and location.

Remove cap (Item 17) from the body (Item 1). Remove the liner seal (Item 6), liner (Item 5) and piston (Item 10). Remove the soft goods from the piston. If the piston is equipped with a wedge ring (Item 23), clean and retain for use during assembly. The dipper tube (Item 4) is swaged in place and no attempt should be made to remove it. The nozzle (Item 3) should not be removed unless it is damaged or the nozzle seal (Item 2) is leaking.

NOTE: Do not remove lock pin and lift adjusting bolt (Items 11 and 12) on valves so equipped unless nozzle is removed. This bolt controls the piston lift and hence the valve's relieving capacity. If either or both the nozzle and lift bolt were removed, then lift must be reset following the procedure of paragraph 2.3.3 (Type XX3 or paragraph 2.3.4 (Type XX9).

2.1.1 Nozzle and nozzle seal disassembly

Refer to Figure 2 for parts description and location.

1. Remove lock pin and lift adjusting bolt from piston, if applicable.
2. Place liner in body and piston, without seat or seat retainer, into liner and on top of nozzle.
3. Place appropriate spacer (see Table I) on top of piston and then the cap over the spacer.
4. Thread the appropriate number of cap bolts (see Table I) into threaded holes on top of body. If two bolts are used, they should be 180° apart. When using four bolts, they should be 90° apart. Always use the shortest cap bolts supplied with the valve unless all cap bolts are required. For example, the 1" Type 40/50 is equipped with two 1.50" long bolts and two 1.88" long bolts but only the two 1.50" long bolts should be used. However, the 2" Type 40/50 is equipped with two 1.25" long bolts and two 1.62" long bolts and all four bolts are required for nozzle installation.
5. Tighten cap bolts evenly to the torque listed in Table I to compress nozzle seal.
6. Use a punch or bar with a light hammer and tap on the nozzle retainer teeth to loosen the nozzle retainer. Unthread nozzle retainer approximately 1/2 turn.
7. Loosen cap bolts to remove load from nozzle. Remove components from main valve.

Copyright © 2008 Tyco Flow Control. All rights reserved.

2.2 Main valve nozzle rework

Should the main valve nozzle seating face become nicked or scratched such that the main valve seat does not seal, the imperfections can be removed by polishing the seating face with 400 grit sandpaper. If necessary, the nozzle may be removed from the body and the nozzle seating face (only the seating face) may be remachined and/or polished using 400 grit sandpaper on a flat surface plate. The resurfaced nozzle must be within the limiting dimensions shown in the Table and Figure below. If the resurfaced seating face standoff is less than the minimum projection height listed, the nozzle must be replaced.

Valve Size and Type X = Main Valve Piston/Seat Type, 3 or 9	Min. Nozzle Projection Height (in)
1/1.5x2 Type 44X/45X (D, E and F Orifice)	.045
1.5x2/3 Type 44X/45X (G and H Orifice)	.040
2” Type 44X/45X	.035
3” Type 44X/45X	.035
4” Type 44X/45X	.035
6” Type 44X/45X	.035
8” Type 44X/45X	.035
1.5” Type 46X	.035
2” Type 46X	.035
3” Type 46X	.035
4” Type 46X	.030
6” Type 46X	.030
8x88 Type 46X	.030
8x10 Type 46X	.030

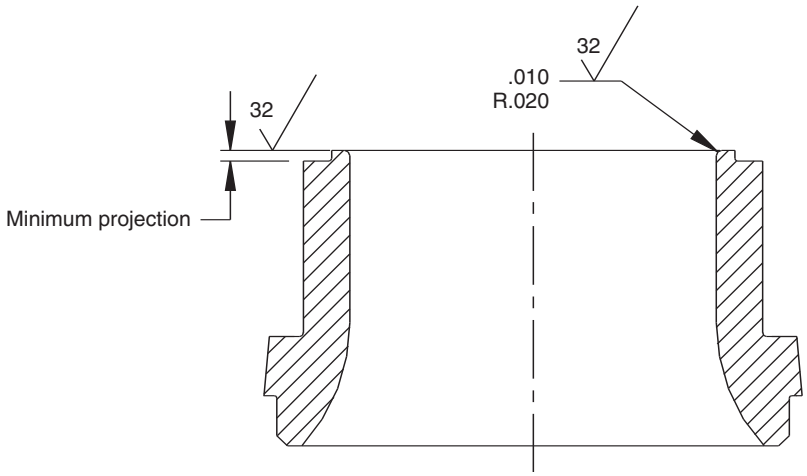

Copyright © 2008 Tyco Flow Control. All rights reserved.

2.3 Assembly

2.3.1 Nozzle and nozzle seal installation

1. Place nozzle seal and nozzle in body.
2. Place nozzle retainer over nozzle and thread into body until it stops on nozzle shoulder. Do not lubricate nozzle retainer threads or mating body threads.
3. Repeat steps 3 through 5 of disassembly procedure to compress nozzle seal. Thread nozzle retainer into body as seal is compressed to keep nozzle retainer from binding against piston.
4. Use a punch or bar with a light hammer and tap on the nozzle retainer teeth to snug the nozzle retainer threads.
5. Loosen cap bolts to remove load from spacer.
6. Remove spacer from valve.

Table I

Valve Size and Type X = Main Valve Seat Type, 3 or 9	Spacer P/N	Cap Bolt Thread	# Cap Bolts To Use	Cap Bolt Torque (ft-lb)
1/1.5x2 Type 44X/45X (D, E and F Orifice)	06.5612.001	.500-20 UNF	2	31
1.5x2/3 Type 44X/45X (G and H Orifice)	06.5612.002	.500-20 UNF	2	41
1.5x2/3 Type 44X/45X (G and H Orifice)	06.5612.002	.625-18 UNF	2	51
2” Type 44X/45X	06.5612.004	.500-20 UNF	4	27
2” Type 44X/45X	06.5612.004	.625-18 UNF	4	34
3” Type 44X/45X	06.5612.006	.500-20 UNF	4	35
3” Type 44X/45X	06.5612.006	.625-18 UNF	4	44
4” Type 44X/45X	06.5612.008	.750-16 UNF	4	130
4” Type 44X/45X	06.5612.008	.875-14 UNF	4	151
6” Type 44X/45X	06.5612.009	.750-16 UNF	2	82
6” Type 44X/45X	06.5612.009	.875-14 UNF	2	95
8” Type 44X/45X	06.5612.010	.875-14 UNF	4	123
8” Type 44X/45X	06.5612.010	1.000-14 UNS	4	140
1.5” Type 46X	06.5612.004	.500-20 UNF	2	19
2” Type 46X	06.5612.006	.500-20 UNF	2	31
2” Type 46X	06.5612.006	.625-18 UNF	2	39
3” Type 46X	06.5612.008	.750-16 UNF	2	113
4” Type 46X	06.5612.011	.625-18 UNF	2	63
6” Type 46X	06.5612.012	.750-16 UNF	2	88
8x88 Type 46X	06.5612.013	.875-14 UNF	4	119
8x10 Type 46X	06.5612.014	1.125-12 UNF	10	89
10” Type 46X	06.5612.015	1.125-12 UNF	10	90

Copyright © 2008 Tyco Flow Control. All rights reserved.

2.3.2 Soft goods installation and main valve reassembly

Refer to Figure 1A (piston/seat Type XX3) and Figure 1B (piston/seat Type XX9) for parts description and location.

2.3.3 Type XX3 piston and seat

Clean and apply a light coating of Dow Corning No. 33 or equivalent silicone lubricant on all threads. Install new seat and reassemble seat retainer and seat retainer screw or screws.

NOTE: Over tightening of seat retainer screw or screws can distort or damage the seat and cause leakage. Retainer screw or screws should be installed until assembly is snug. Then tighten an additional 1/4 to 1/2 turn to secure assembly.

On 1" thru 4" Type 43/53 and 1.5" thru 3" Type 63 valves, if either or both the nozzle and lift bolt were removed, then lift needs to be set. If lift setting gages are available, use lift setting procedure 06.3349 (gas service) or 06.3350 (liquid service); otherwise use procedure 05.2284.

Install new piston seal along with original wedge ring (if so equipped). Lubricate upper portion of liner I.D., piston seal, and wedge ring (if present) with Dow Corning No. 33 or equivalent for all gas service valves and for liquid service valves with set pressure below 275 psig. Liquid service valves with set pressure at 275 psig and above use Desco 600 or equivalent. Use lubricant sparingly. Insert liner and piston into body and install new liner seal.

Install the cap making sure it is seated squarely into body. Install cap bolts hand tight then tighten an additional 1/4 to 1/2 turn uniformly so as not to "cock" the cap. Such a condition may result in leakage at the liner seal or cause the piston and liner to bind.

2.3.4 Type XX9 piston and seat

Clean and apply a light coating of Dow Corning No. 33 or equivalent silicone lubricant on all threads. Do not apply any lubricant to any of the soft goods. Install new seat and reassemble seat retainer and seat retainer screw or screws.

NOTE: Over tightening of seat retainer screw or screws can distort or damage the seat and cause leakage. Retainer screw or screws should be installed until assembly is snug. Then tighten an additional 1/4 to 1/2 turn to secure assembly.

On 1" thru 4" Type 49/59 and 1.5" thru 3" Type 69 valves, if either or both the nozzle and lift bolt were removed, then lift needs to be set. If lift setting gages are available, use lift setting procedure 06.3349 (gas service) or 06.3350 (liquid service); otherwise use procedure 05.2284.

Install new piston seal along with original wedge ring (if so equipped and snap ring. Insert liner and piston into body and install new liner seal.

Install the cap making sure it is seated squarely into body. Install cap bolts hand tight then tighten an additional 1/4 to 1/2 turn uniformly so as not to "cock" the cap. Such a condition may result in leakage at the liner seal or cause the piston and liner to bind.

Copyright © 2008 Tyco Flow Control. All rights reserved.

Notes

(1) Field replaceable only if required.

(2) Recommended spare parts for repair.

(3) Used only for liquid service.

(4) Not used on 6", 8" Type 443/453 and 4" and larger Type 463.

Refer to Section 7.1 for soft goods repair kit part numbers.

Item	Description
1	Body
2	Nozzle Seal(1)
3	Nozzle(1)
4	Dipper Tube
5	Liner
6	Liner Seal(2)
7	Seat(2)
8	Seat Retainer
9	Seat Retainer Screw
10	Piston
11	Lift Adjusting Bolt(4)
12	Lock Pin(4)
13	Piston Seal(2)
15	Nozzle Retainer
16	Dome Spring
17	Cap
18	Cap Bolt
21	Supply Tube
22	Tube Connector
23	Wedge Ring(3)

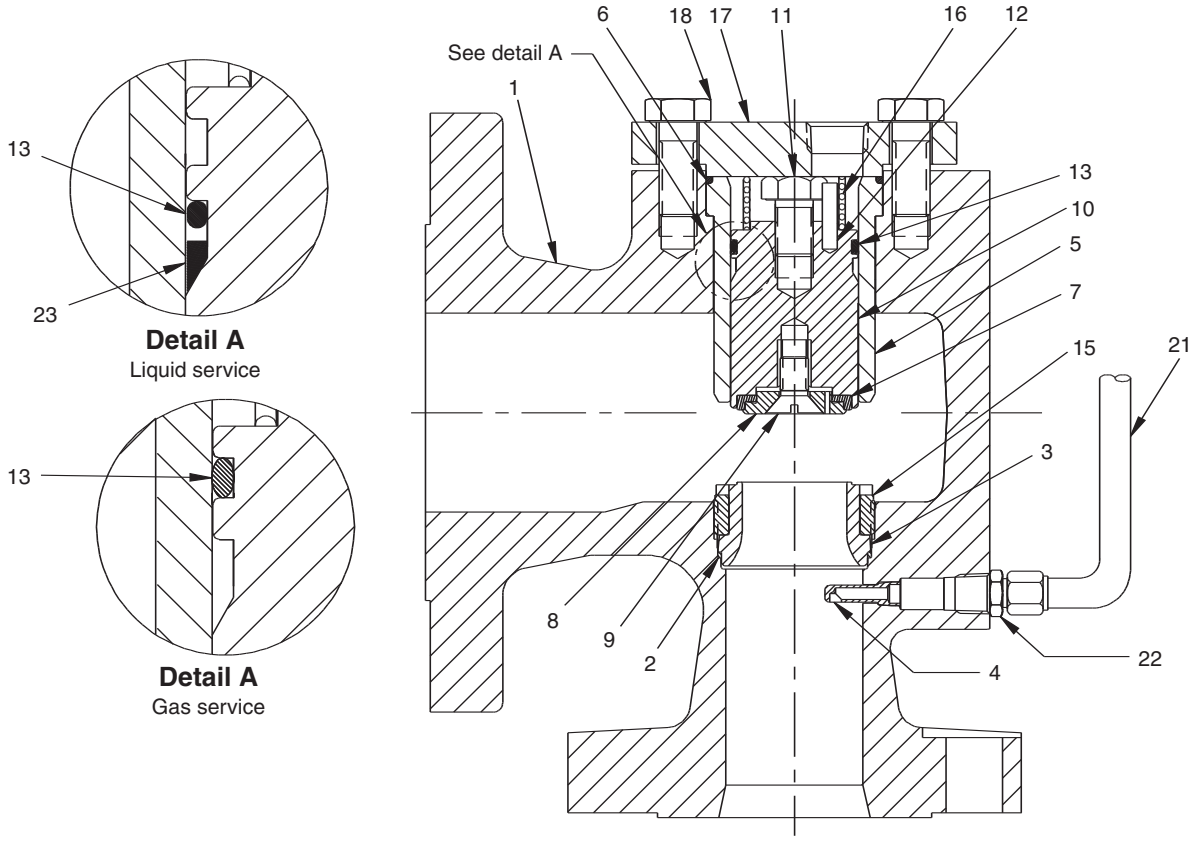

Figure 1A – Main Valve
443/453/463

Engineering Doc. #05.9040.270 Rev. H

Copyright © 2008 Tyco Flow Control. All rights reserved.

Item	Description
1	Body
2	Nozzle Seal(1)
3	Nozzle(1)
4	Dipper Tube
5	Liner
6	Liner Seal(2)
7	Seat(2)
8	Seat Retainer
9	Seat Retainer Screw
10	Piston
11	Lift Adjusting Bolt(4)
12	Lock Pin(4)
13	Piston Seal(2)
14	Snap Ring(2)
15	Nozzle Retainer
16	Dome Spring
17	Cap
18	Cap Bolt
21	Supply Tube
22	Tube Connector
23	Wedge Ring(3)

Notes

(1) Field replaceable only if required.

(2) Recommended spare parts for repair.

(3) Used 1" / 1 1/2" (D,E,F orif. liq.only), 2" (liq. only), and 4" and larger Type 449/459; and 1 1/2" (liq. only), and 3" and larger type 469.

(4) Not used on 6" or 8" Type 449/459 and 4" and larger Type 469.

Refer to Section 7.1 for soft goods repair kit part numbers.

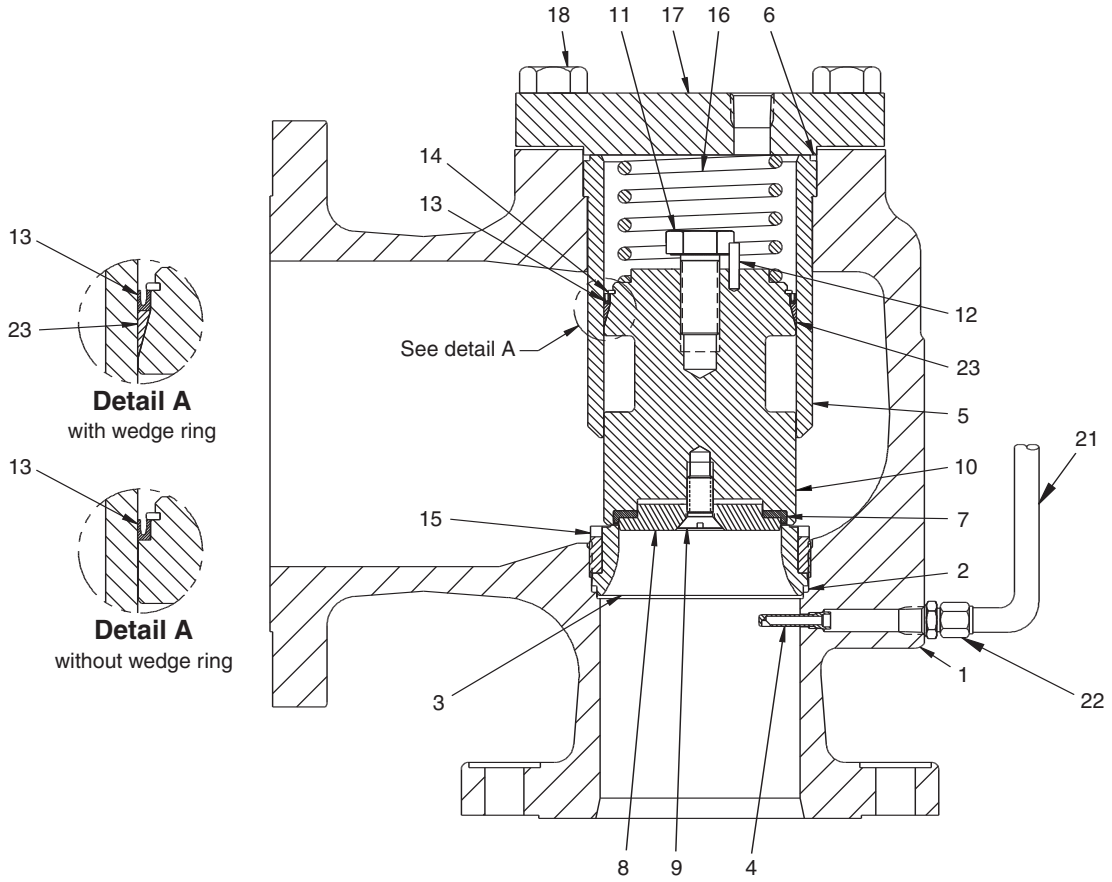

Figure 1B – Main Valve
449/459/469

Engineering Doc. #05.9040.270 Rev. H

Copyright © 2008 Tyco Flow Control. All rights reserved.

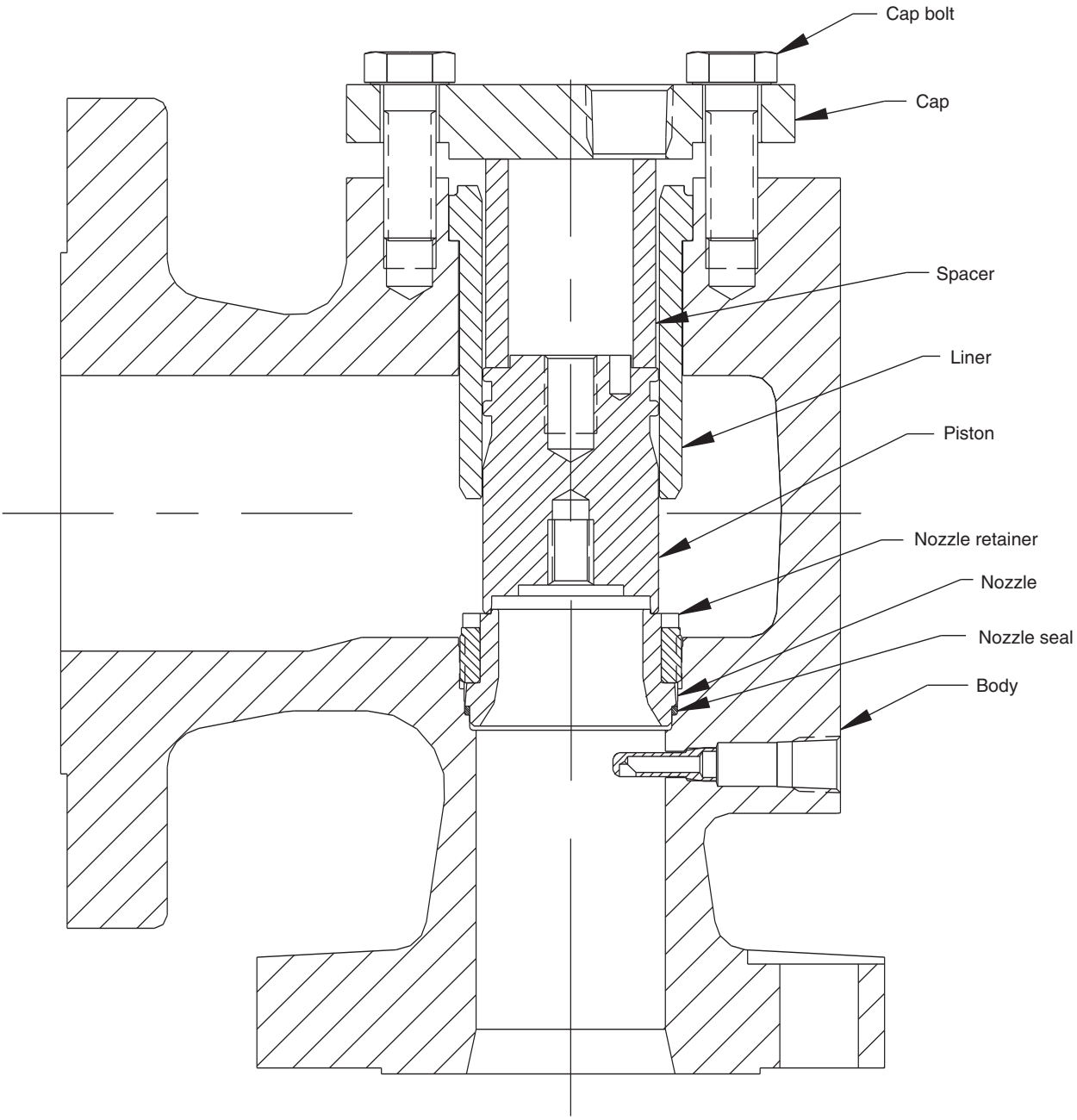

Dir: H:/MGarza/05-9040-270Fig2.dwg

Figure 2

Copyright © 2008 Tyco Flow Control. All rights reserved.

3.0 Pilot maintenance

Refer to Figures 3, 4 and 5.

Arrange all parts in an orderly sequence on a flat work surface during disassembly. This will facilitate assembly and help ensure that the correct parts are assembled in the proper sequence.

3.1 Disassembly

Before beginning disassembly, bleed off any pressure trapped in the main valve or pilot.

3.1.1 Standard pilot – gas or liquid service

Note: If the pilot is equipped with a lift lever, the lift lever handle assembly (Item 42) must be removed from the cap (Item 17) before continuing with disassembly. To do this, hold the lift lever handle in the position shown in Figure 3, unscrew the handle assembly bushing (Item 43) from the cap, and remove the handle assembly.

Remove the cap (Item 17), for pilot with lift lever remove jam nut (Item 44) and lift lever nut (Item 45), loosen the jam nut (Item 16), and turn the adjustment screw (Item 15) counterclockwise to relieve the spring tension. Exercise caution when removing the spring bonnet (Item 14) from pilots set above 500 psig, as spring tension is not completely relieved until the bonnet is removed. Remove the spring bonnet, spring (Item 6), and spring washers (Item 13).

Lift the piston plate (Item 4) with internal parts attached upward and remove from the body (Item 1). Unscrew the piston nut (Item 9) from the feedback piston (Item 3) and remove the lock washer (Item 36). Disassemble the sense piston (Item 10) and feedback piston from the piston plate. Unscrew the inlet nozzle (Item 5) from the feedback piston. Remove the spool spring (Item 8) and inlet nozzle with the spool from the feedback piston.

Remove the bias spring (Item 11) and body plug (Item 2) from the body. Using a hex key (Allen wrench) inserted through the bottom of the body into the hex socket in the outlet nozzle (Item 25), unscrew the outlet nozzle and remove it through the top of the body. Note that when viewed from the bottom of the body, the hex key is turned clockwise to unscrew the outlet nozzle.

3.1.2 Iso-Dome pilot – gas service

Note: All Iso-Dome Pilots are gas service pilots; however, fully assembled valves with these pilots may be either gas service valves or liquid services valves.

After bleeding off any pressure trapped in the main valve or pilot, remove the pilot with the regulator (Item 55) attached from the main valve. Unscrew and remove bracket bolts (Items 52) and bracket bolts (Items 53). Slide the bracket (Item 49) outward approximately $1^{1}/_{2}$" along the regulator cover spacer (Item 50).

Using an $^{11}/_{16}$" wrench, unscrew the adapter (Item 48) with regulator attached from the body (Item 1). If necessary, slide the bracket farther out along the cover spacer so that it does not hit the body. Support the regulator during this operation in order to avoid damaging the adapter threads or the body threads. Loosen set screw (Item 54) and remove regulator cover cap (Item 51), regulator cover spaces (Item 50), and bracket.

Continue pilot disassembly in accordance with the procedures described in paragraph 3.1.1 except that the Iso-Dome pilot uses an adapter in place of the body plug (Item 2) in a standard pilot.

3.1.3 Iso-Sense pilot – gas or liquid service

The Iso-Sense Pilot sectional drawing shown in Figure 3 is presented for identification purposes only. This is a special pilot assembly which may incorporate non-standard components. Contact Anderson Greenwood for replacement parts and maintenance instructions for individual pilots (serial number is required for complete identification).

3.1.4 Pilot variations and accessories

For pilot equipped with a one-piece spool, Figure 3 Style A, remove the spool seal (Item 28) and the outlet seat (Item 30) from the spool (Item 31; then remove the spool from the inlet nozzle.

For pilot equipped with a three-piece spool, Figure 3 Style E, unscrew the spool nut (Item 39) from the inner spool (Item 41), remove the outer spool (Item 40) from the inlet nozzle and remove the inner spool from the outer spool.

Copyright © 2008 Tyco Flow Control. All rights reserved.

For pilot equipped with a field test accessory, Figure 4, remove this accessory with the shuttle from the body (Item 1). Disassemble the dome connector from the field test body and remove the spring, plunger, and shuttle.

For pilot equipped with a backflow preventer and pilot exhaust backflow check valve, Figure 5, remove these accessories from main valve dome port (backflow preventer) and the pilot exhaust port (backflow check valve). Unscrew the backflow preventer bushing from the body and remove the shuttle. Unscrew the fitting from the backflow check valve body and remove the flow washer and ball.

Remove and discard all old seats, seals, and O-rings before beginning assembly.

3.2 Assembly

3.2.1 Standard pilot – gas or liquid service

Assembly is done in the reverse order of disassembly. Lightly lubricate all O-rings, all sliding surfaces, screw threads and spring washer pivot points with Dow Corning No. 33 Silicone grease or equivalent. Do not lubricate the inlet seat (Item 7) or the outlet seat (Item 30). For pilot with lift lever, do not install lift lever handle assembly (Item 42) until final pilot adjustment is completed, see paragraph 4.6.

Pilot assembly and pretest:

When assembling piston plate with attached internal parts subassembly to body subassembly, orient hole in plate to fit over the length of damper bushing (Item 38) projecting past the body face. Engage spool in outlet nozzle and press gently until assembly drops in place.

Pretest to verify proper feedback piston function by depressing piston stack assembly downward. The bias spring should return the stack assembly to the upward position. If the stack assembly does not return, identify and correct source of malfunction before completing assembly.

3.2.2 Iso-Dome pilot – gas service

All Iso-Dome pilots are gas service pilots (see Note paragraph 3.1.2).

Assemble pilot in accordance with procedures described in paragraph 3.2.1. Support the regulator when threading the adapter (Item 48) with regulator attached into the body (Item 1). With an $^{11}/_{16}$" wrench used to back-up the adapter, the regulator may be rotated ± $^{1}/_{4}$ turn about the adapter axis to align the bracket (Item 49) mounting surfaces on the body and the regulator bracket (Item 56).

If alignment can not be achieved with ± $^{1}/_{4}$ turn, unthread the regulator from the adapter. Clean the $^{1}/_{4}$ NPT threads on the adapter and in the regulator outlet port and wrap the adapter threads with several wraps of Teflon® thread seal tape. Screw the regulator onto the adapter and tighten sufficiently to effect a thread seal and alignment of the bracket mounting surfaces.

Loosen the two #10-24 socket head cap screws in the regulator bracket so that the bracket can slide along the outside of the regulator. Install the bracket and hand tighten two bracket bolts (Item 52) into the body. Hand tighten two bracket bolts (Item 53) into the regulator bracket and securely tighten the two #10-24 socket head cap screws into the regulator bracket. Securely tighten the four bracket bolts. Do not install the regulator cover spacer and regulator cover cap until final adjustment is completed, see paragraph 4.3.

3.2.3 Accessories

Assembly is done in the reverse order of disassembly. On backflow preventers (Reference Figures 4 and 5), lightly lubricate the bushing threads with Dow Corning No. 33 silicone grease or equivalent. A small amount of lubricant can be applied to the bushing seal(s).

Do not get any lubricant on the shuttle, shuttle seat(s) and or bushing seat. When re-installing the backflow preventer on the main valve dome port orient it so that the bushing is connected to the pilot (process) side.

Teflon® is a registered trademark of E.I. duPont de Nemours Company.

Copyright © 2008 Tyco Flow Control. All rights reserved.

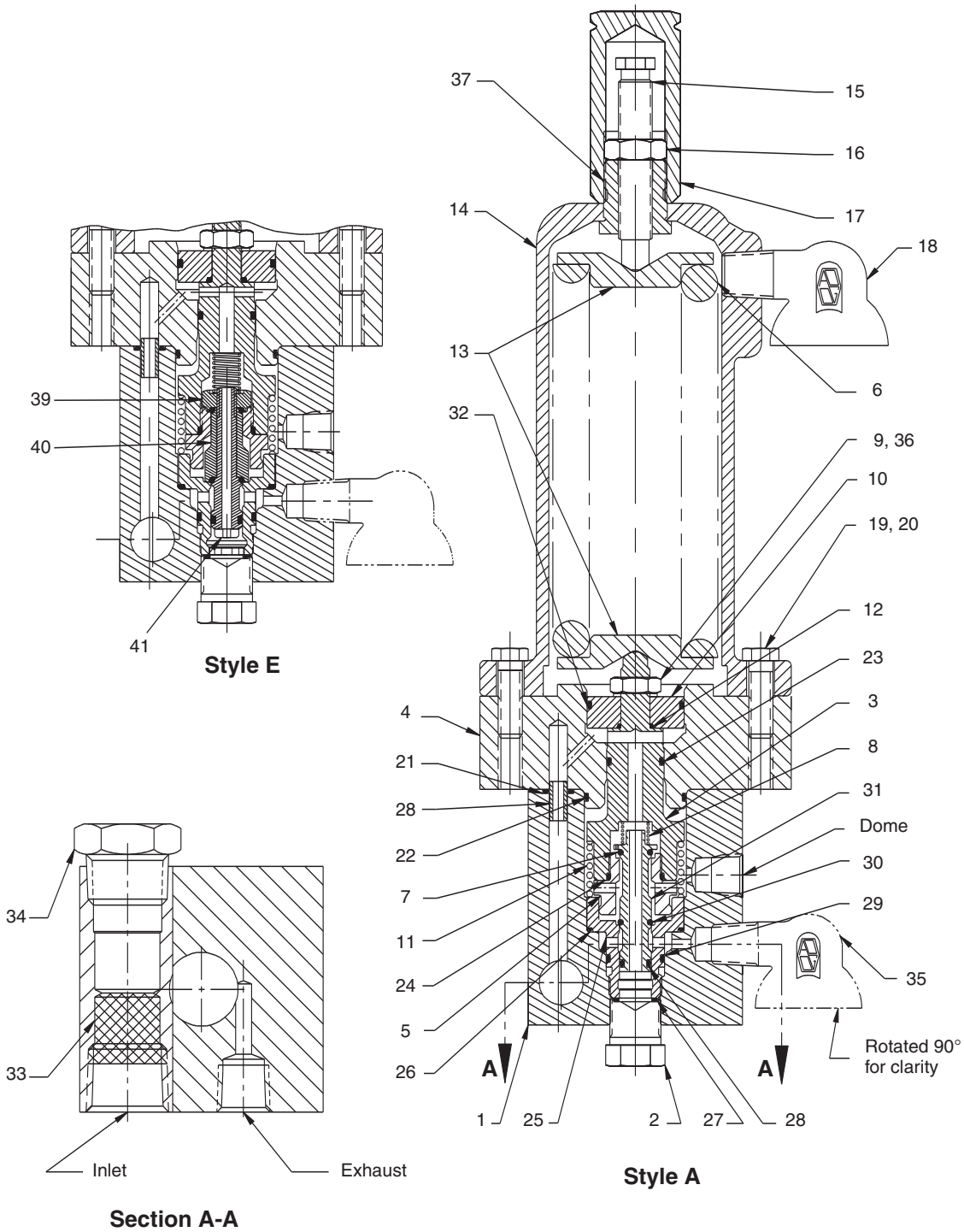

Figure 3

Pilot
(Continued thru page 14)

Copyright © 2008 Tyco Flow Control. All rights reserved.

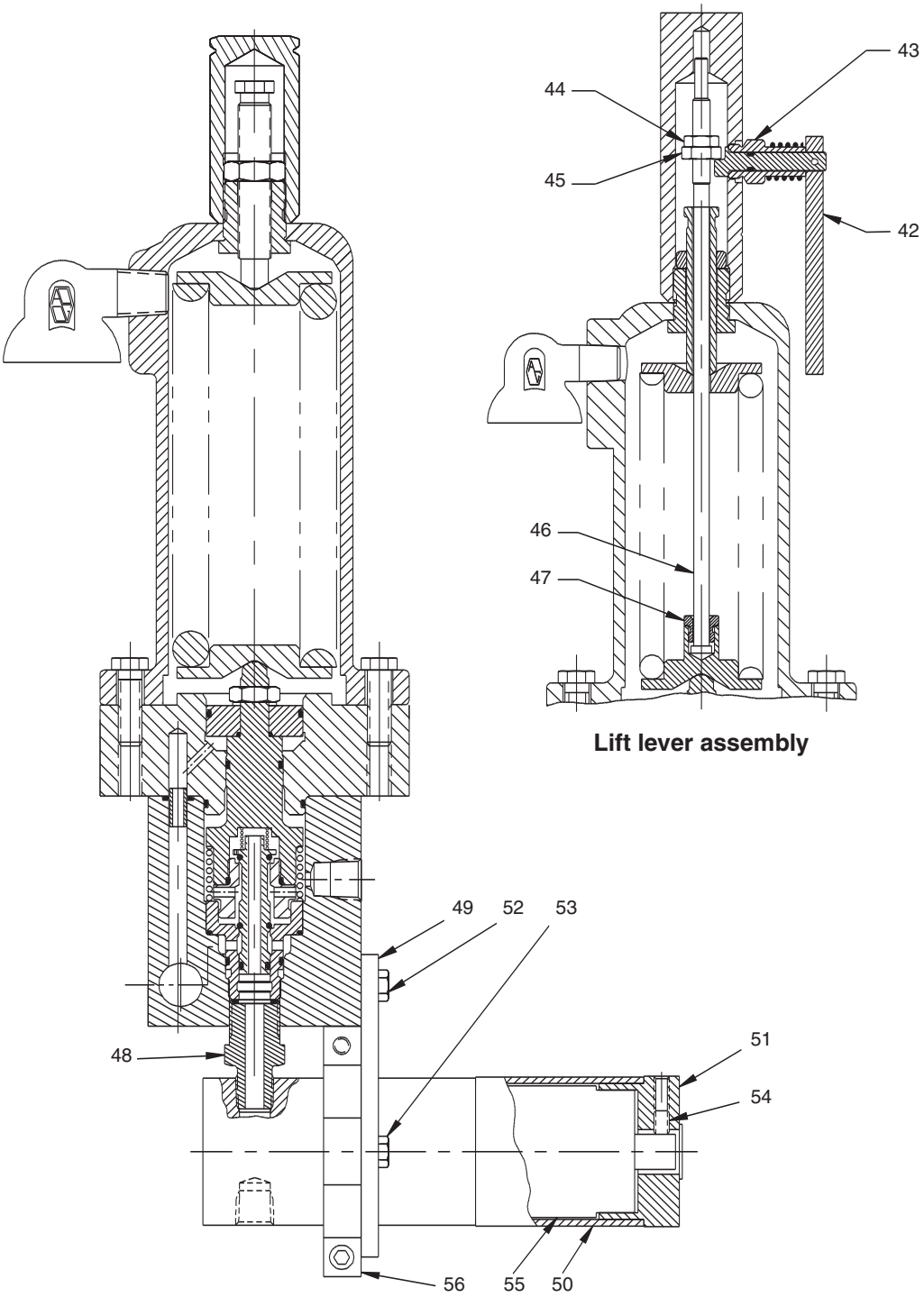

Lift lever assembly

Iso-Dome pilot assembly

Figure 3

Pilot
(Continued from page 12)

Copyright © 2008 Tyco Flow Control. All rights reserved.

Item	Description
1	Body
2	Plug, Body
3	Piston, Feedback
4	Plate, Piston
5	Nozzle, Inlet
6	Spring
7	Seat, Inlet(1)
8	Spring, Spool
9	Nut, Piston
10	Piston, Sense
11	Spring, Bias
12	Seal, Feedback/Sense Piston(1)
13	Washer, Spring
14	Bonnet, Spring
15	Screw, Adjustment
16	Nut, Jam
17	Cap
18	Vent, Bonnet
19	Bolt, Piston Plate
20	Bolt, Body
21	Seal, Body/Piston Plate(1)
22	Seal, Piston Plate(1)
23	Seal, Feedback Piston(1)
24	Seal, Inlet Nozzle(1)
25	Nozzle, Outlet
26	Seal, Upper Outlet Nozzle(1)
27	Seal, Body Plug(1)
28	Seal, Spool(1)
29	Seal, Lower Outlet Nozzle(1)
30	Seat, Outlet(1)
31	Spool
32	Seal, Sense Piston(1)
33	Screen, Inlet
34	Plug, Body F.T. Port
35	Vent, Exhaust Port(3)
36	Washer, Lock
37	Insert, Bonnet
38	Bushing/Damper
39	Nut, Spool(2)
40	Spool, Outer(2)
41	Spool, Inner(2)
42	Handle Assy, Lift Lever
43	Bushing, Lift Lever Handle Assy
44	Nut, Jam
45	Nut, Lift Lever
46	Rod, Lift Lever
47	Bushing, Lift Lever
48	Adapter
49	Bracket
50	Spacer, Regulator Cover
51	Cap, Regulator Cover
52	Bolt-DH, Bracket
53	Bolt, Bracket
54	Screw-Set
55	Regulator
56	Bracket -Regulator
57	Coupling

Notes

(1) Recommended spare parts for repair.

(2) For Style E pilots.

(3) After Nov. 1999 pilot exhaust connected to main valve outlet for standard assemblies and exhaust vent not supplied except standard Iso-Dome pilot assemblies exhaust to atmosphere and are supplied with exhaust vent.

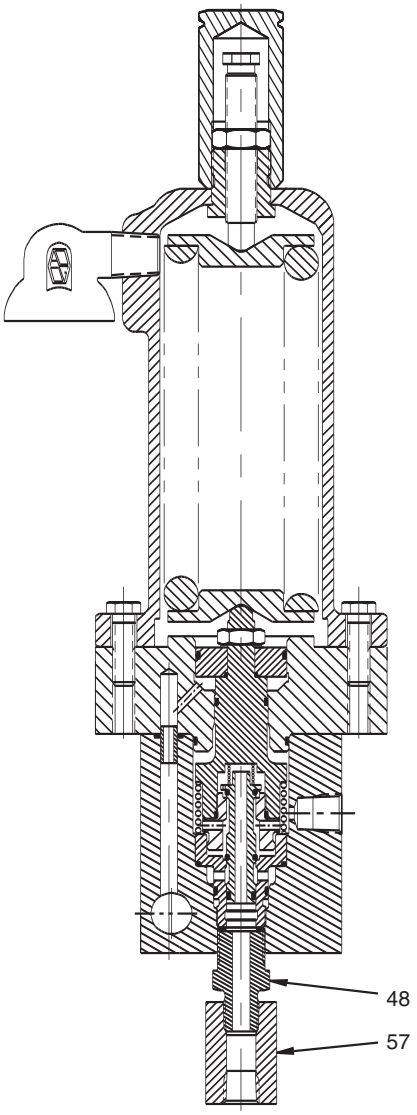

Iso-Sense pilot assembly

Figure 3

Pilot
(Continued from page 12)

Copyright © 2003 Tyco Flow Control. All rights reserved.

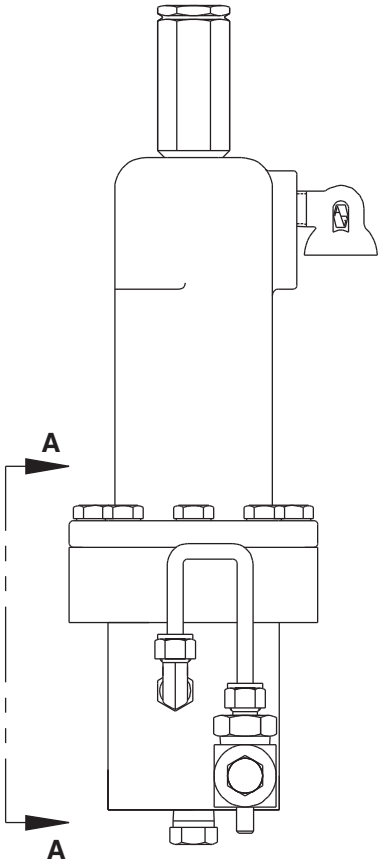

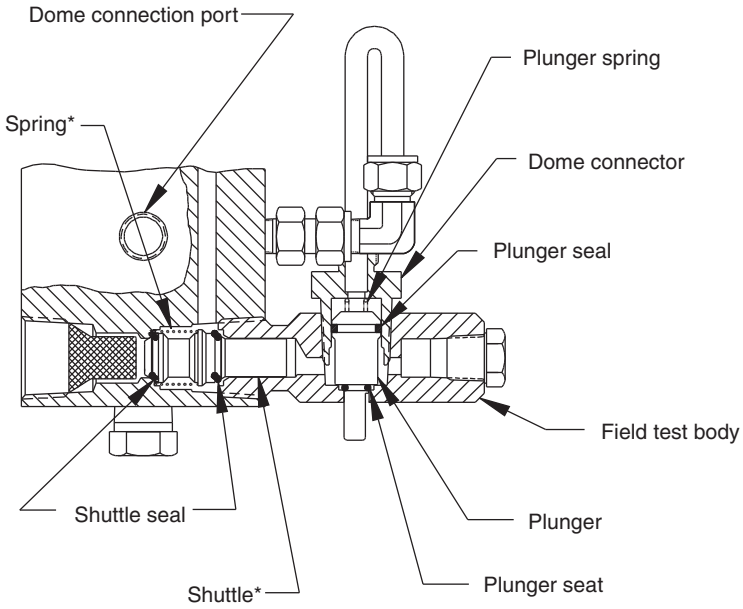

*Spring based shuttle design standard from July 1st, 2002

View A-A

Figure 4
Field test accessory

Copyright © 2003 Tyco Flow Control. All rights reserved.

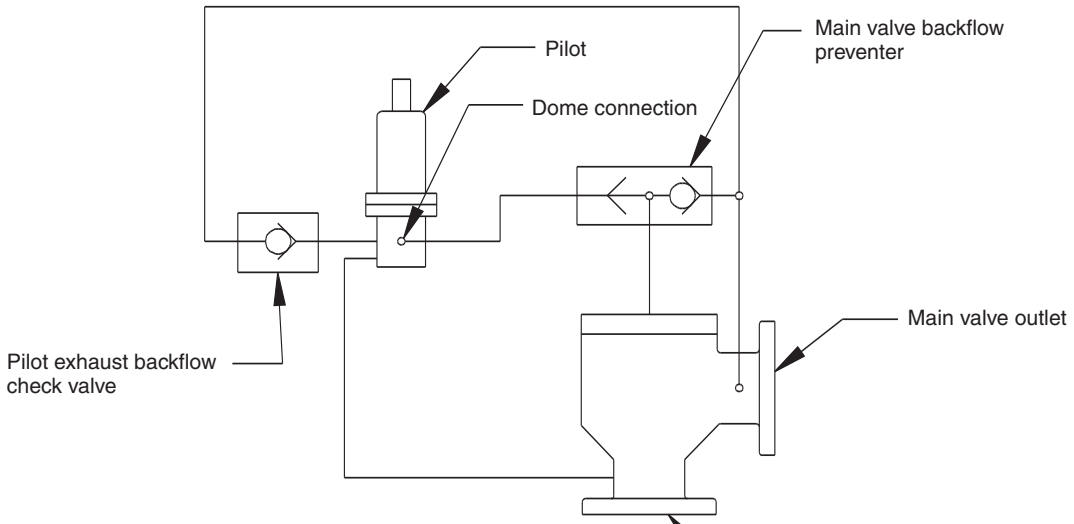

Backflow preventer connection

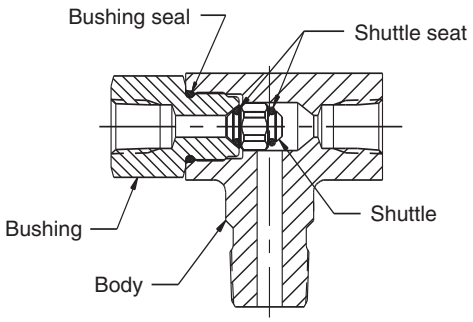

Backflow preventer
(Standard prior to September 2002)

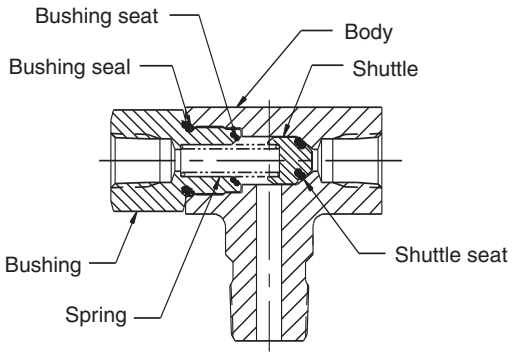

Backflow preventer with bias spring
(Standard beginning in September 2002)

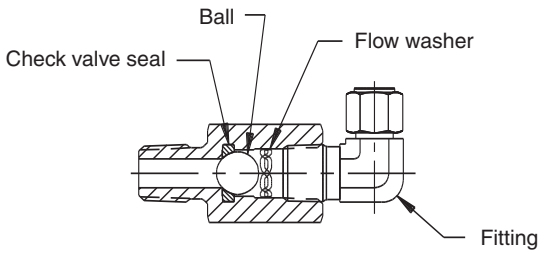

Pilot exhaust backflow check valve

Figure 5

Copyright © 2008 Tyco Flow Control. All rights reserved.

4.0 Pilot set pressure adjustment

4.1 Definitions

Set pressure is defined as the supply pressure at which the dome pressure is 70% of the supply pressure. This corresponds to the initial audible discharge of gas or first steady stream of liquid from the main valve.

Crack Pressure is defined as the supply pressure at which gas flow begins at the pilot exhaust.

Reseat Pressure is defined as the supply pressure at which the dome pressure increases to 75% of supply pressure. The dome pressure will continue to increase until the supply pressure decreases to 94% of set.

4.2 Set pressure, standard pilot

4.2.1 Gas service pilot

To adjust the set pressure, a test set-up similar to that shown in Figure 6 should be used. The test media should be air. The adjustment screw should be turned IN most of the way. Increase the supply pressure to nameplate setting and slowly back out the adjustment screw until flow through the pilot exhaust begins. Continue to slowly back out the adjustment screw until dome pressure is 70% of the supply pressure and the supply pressure meets the required set pressure tolerance of paragraph 4.5. After adjustment is completed, securely tighten the jam nut.

To determine reseat pressure, shut off the air supply and use the accumulator vent valve to slowly reduce the supply pressure until the dome pressure is 75% of supply pressure.

Close the shut-off valve and slowly open the bleed valve. When the dome pressure gauge reading is zero, the pilot may be removed from the test set-up.

4.2.2 Liquid service pilot

Note: An initial set pressure adjustment may be made with air as the supply pressure media using a test set-up similar to that shown in Figure 6 and following the procedure described in paragraph 4.2.1 above. This initial set pressure will be approximately 1 1/2% lower than the set pressure observed when the pilot is tested on liquid.

To adjust the set pressure, a test set-up similar to that shown in Figure 7 should be used. The test media should be water. Some air volume must be maintained above the water surface in the accumulator.

Increase the air supply pressure to nameplate setting and slowly back out the adjustment screw until water flow through the pilot exhaust begins. Continue to slowly back out the adjustment screw until dome pressure is 70% of the supply pressure and the supply pressure meets the required set pressure tolerance of paragraph 4.5.

To determine reseat pressure, shut off the air supply and use the accumulator vent valve to slowly reduce supply pressure until the dome pressure is 75% of supply pressure.

Close the shut-off valve in the water line to the pilot inlet port and slowly open the bleed valve. When the dome pressure gauge reading is zero, the pilot may be removed from the test set-up.

The optional indicator assembly shown in Figure 7 may be used for set pressure above 70 psig. If an indicator assembly is used, slowly increase the supply pressure until the indicator pin pulls into the indicator assembly and is approximately flush with the end of the indicator body. The pressure when the pin pulls in is the set pressure. Loosen the jam nut, adjust the adjustment screw, and retighten the jam nut as required to meet the set pressure tolerance of paragraph 4.5.

Shut off the air supply and use the accumulator vent valve to slowly bleed down supply pressure until the indicator pin “pops” out of the indicator assembly (full extension of the pin is approximately 7/16”). The pressure when the pin “pops” out is the reseat pressure.

Close the shut-off valve in the water line to the pilot inlet port and slowly open the bleed valve. When the dome pressure gauge reading is zero, the pilot may be removed from the test set-up.

Copyright © 2008 Tyco Flow Control. All rights reserved.

4.3 Set pressure, Iso-Dome pilot

Note: All Iso-Dome pilots are gas service pilots (See Note paragraph 3.1.2).

4.3.1 Gas sense pilot

To adjust set pressure, a test set-up similar to that shown in Figure 8 should be used. The air supply to the regulator inlet should be adjusted so that the dome pressure gauge reading is 92% ± 2% of nameplate set pressure. The pressure at the regulator inlet should be a minimum of 200 psi greater than the specified dome pressure. The adjustment screw should be turned IN most of the way. Generally it is not necessary to perform any service work on the regulator; however, if maintenance or repair is indicated, contact the regulator manufacturer for instructions and parts. The regulator output pressure should be adjusted if service was performed on the regulator or the pilot set pressure is being changed. Apply pressure to the regulator inlet port of 200 psi greater than the specified dome pressure. Using a 1/2" open end wrench, turn the regulator adjusting screw, clockwise rotation increases and counterclockwise rotation decreases output pressure, as required to produce a dome pressure gauge reading equal to 92% ± 2% of the specified pilot set pressure. Final adjustment should be made in the increasing pressure direction (with clockwise rotation). After final adjustment is completed, install the regulator cover spacer and the regulator cover cap. Securely tighten the socket head set screw to lock the cover cap to the regulator adjusting screw.

WARNING: IF REGULATOR OUTPUT PRESSURE IS SET OUTSIDE OF THE 92 ±2% OF NAMEPLATE SET PRESSURE LIMITS, THE PILOT (AND THE ASSEMBLED VALVE) SET PRESSURE MAY NOT COMPLY WITH THE TOLERANCE REQUIREMENTS OF SECTION VIII OF THE ASME BOILER AND PRESSURE VESSEL CODE.

Increase the supply pressure to the nameplate setting and slowly back out the adjustment screw until flow through the pilot exhaust begins. Continue to slowly back out the adjustment screw until dome pressure is 70% of the supply pressure. After adjustment is completed, securely tighten the jam nut.

Close the block valve in the air supply line to the accumulator, close the block valve in the air supply line to the regulator, verify that the shut-off valve is open, slowly open the vent valve, and slowly open the bleed valve. When the supply pressure gauge and the dome pressure gauge each read zero, the pilot may be removed from the test set-up.

4.3.2 Liquid sense pilot

To adjust the set pressure, a test set-up similar to that shown in Figure 9 should be used. The air supply to the regulator inlet should be adjusted so that the dome pressure gauge reading is 92% ± 2% of nameplate set pressure. The pressure at the regulator inlet should be a minimum of 200 psi greater than the specified dome pressure. Generally it is not necessary to perform any service work on the regulator; however, if maintenance or repair is indicated, contact the regulator manufacturer for instructions and parts. If service was performed on the regulator or if the pilot set pressure is being changed, the regulator output pressure should be adjusted following the procedure described in paragraph 4.3.1.

Adjust the pilot set pressure in accordance with procedure described in paragraph 4.2.2 except no initial set pressure adjustment is made.

Close the block valve in the air supply line to the accumulator, close the block valve in the air supply line to the regulator, verify that the shut-off valve in the water line to the pilot is open, slowly open the vent valve, and slowly open the bleed valve. When the supply pressure gauge and the dome gauge each read zero, the pilot may be removed from the test set-up.

Copyright © 2008 Tyco Flow Control. All rights reserved.

4.4 Range of adjustment

All pilots can be adjusted ±5 % beyond the nameplate setting. If a set pressure change is made that requires a new spring, consult Factory or refer to appropriate spring chart in Anderson Greenwood report number 05.9065.017 to make proper selection.

4.5 Performance requirements

Set Pressure (psig)	Set Pressure Tolerance	Crack Pressure Minimum	Reseat Pressure Limits
100 to 1480 inclusive	± 3%	94% of set	96 to 100% of set

4.6 Lift lever handle assembly installation

For pilot equipped with a lift lever, install the lift lever handle assembly (Item 42) after completing the final pilot adjustment.

Screw the lift lever nut (Item 45) on the threaded portion of the lift lever rod (Item 46) until the lower face of the lift lever nut is approximately 2 1/16" above the top of the spring bonnet (Item 14). Use the jam nut (Item 44) to lightly lock the lift lever nut in place. Screw the cap on the threaded projection of the bonnet insert (Item 37) until it is hand tight against the spring bonnet. The lower face of the lift lever nut should be even with the center of the threaded hole in the cap. If the lift lever nut is not positioned correctly, remove the cap and adjust the nuts as required, and reinstall the cap.

With the lift lever handle held in the position shown in Figure 3, install the handle assembly by screwing the handle assembly bushing (Item 43) into the cap. The cam surface of the lift lever handle assembly must contact the lower face of the lift lever nut between 15° and 45° of clockwise or counterclockwise rotation of the handle past its null or centered position. Resistance of the handle indicates contact has occurred. If resistance occurs at less than 15°, the lift lever nut must be positioned higher. If resistance first occurs at more than 45°, the nut must be positioned lower on the lift lever rod.

If necessary, remove the handle assembly from the cap following the procedure of paragraph 3.1 and repeat this assembly procedure in order to correctly position the lift lever nut and jam nut on the threaded portion of the lift lever rod. When correctly positioned lock the lift lever nut with the jam nut, install and securely tighten the cap, install the handle assembly, and securely tighten the handle assembly bushing.

CAUTION: To avoid damaging any of the lift lever components, do not rotate the lift lever handle past that position where the cam surface of the handle assembly first contacts the lower face of the lift lever nut.

Copyright © 2008 Tyco Flow Control. All rights reserved.

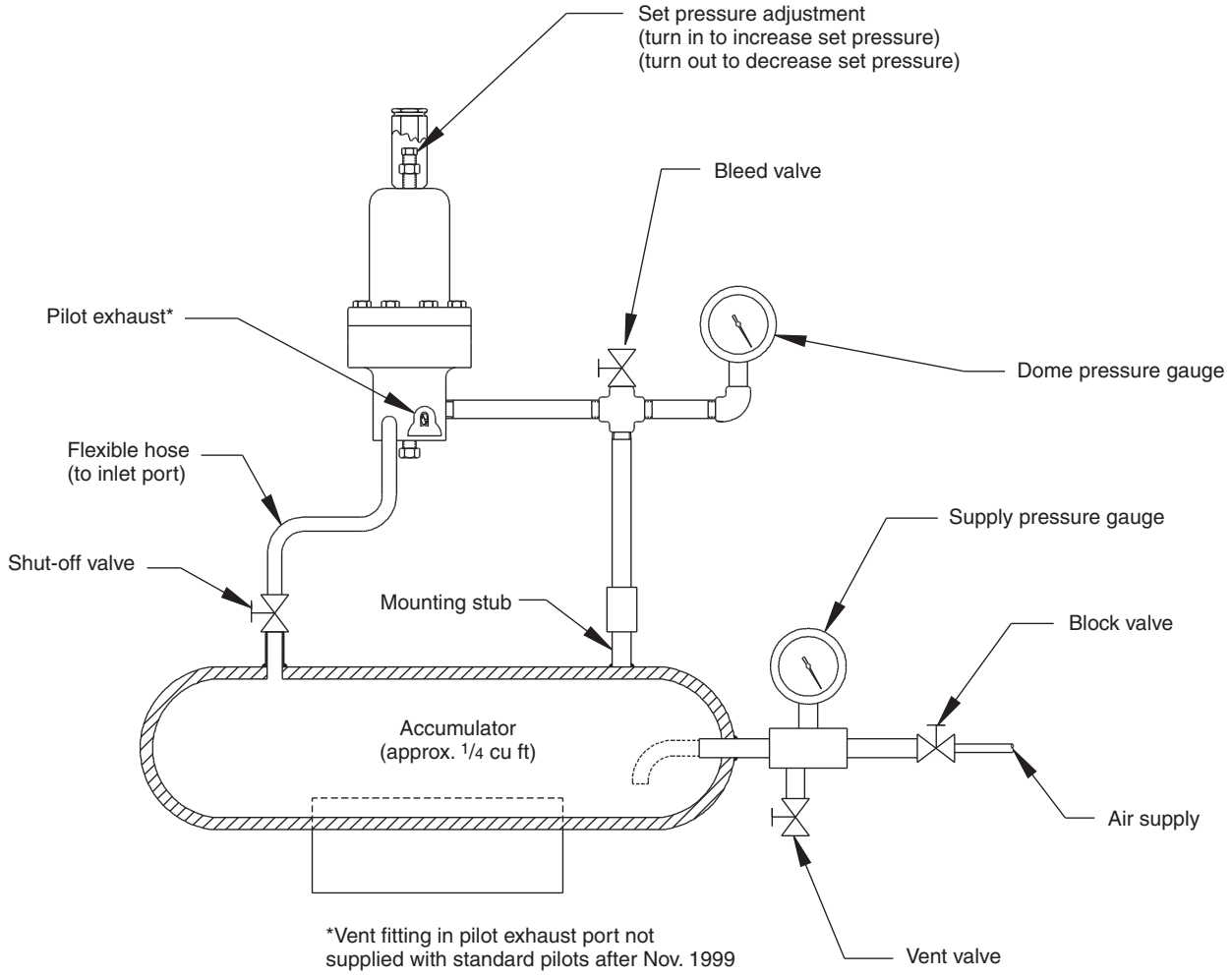

Figure 6

Copyright © 2008 Tyco Flow Control. All rights reserved.

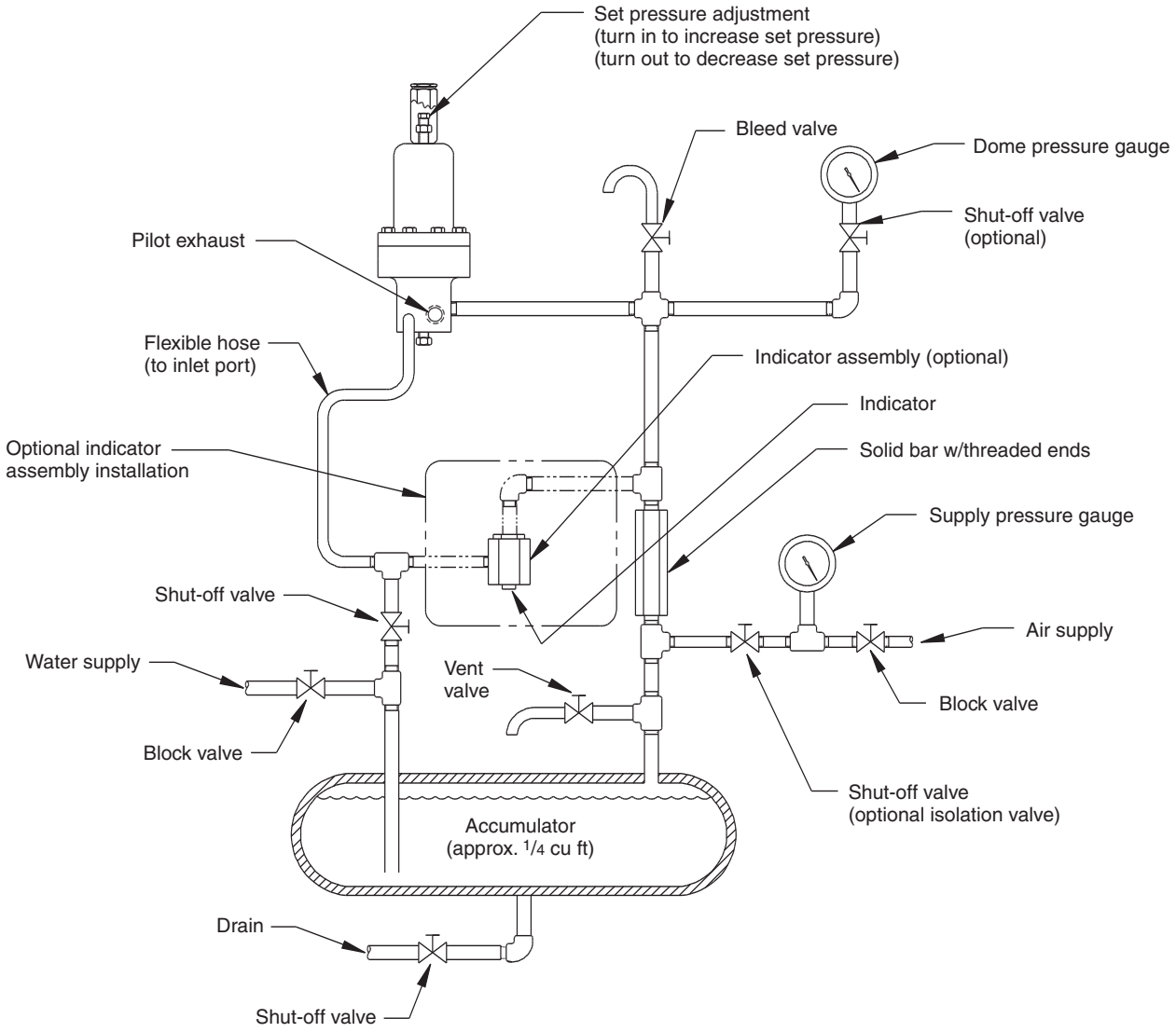

Figure 7

Copyright © 2008 Tyco Flow Control. All rights reserved.

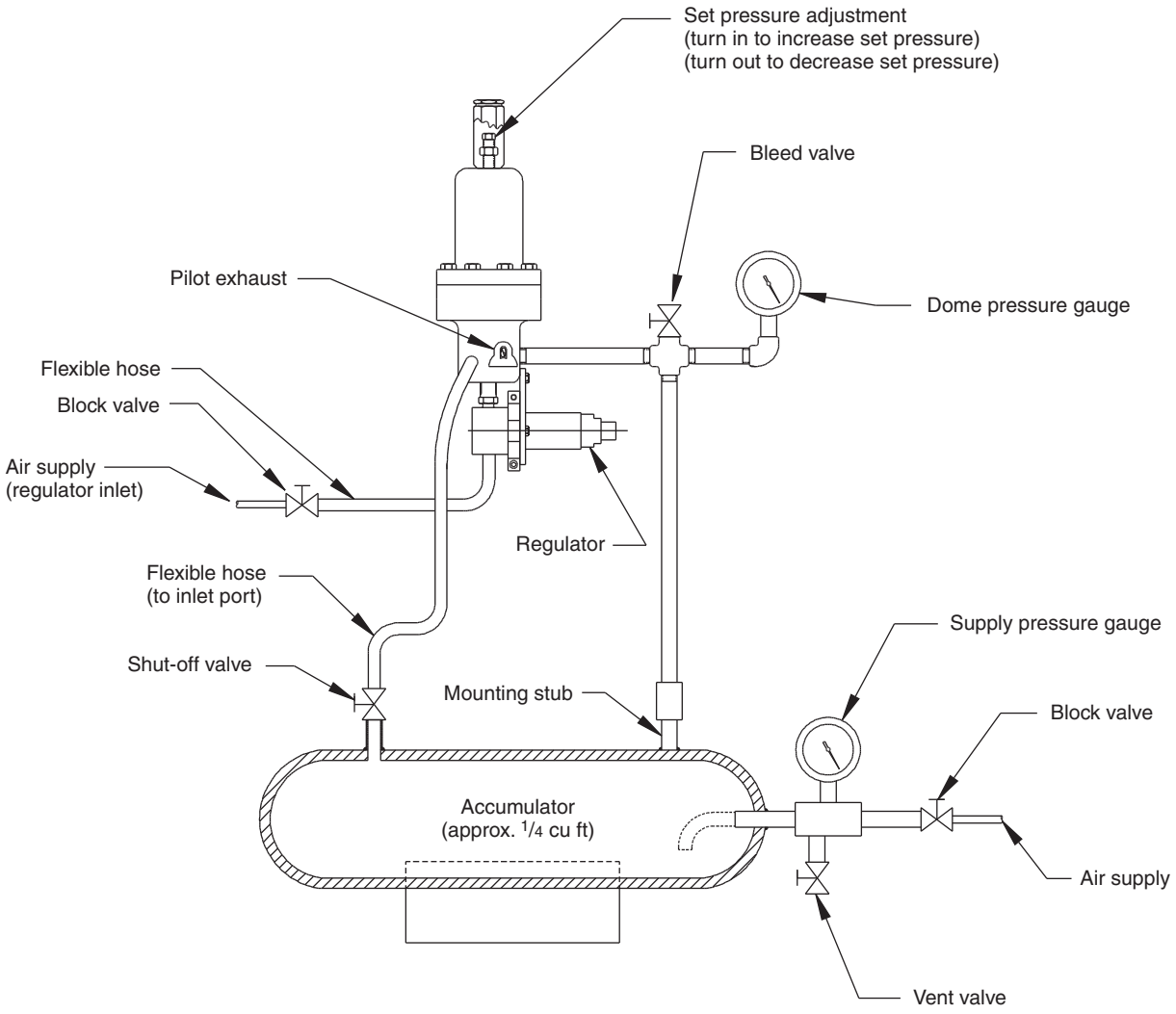

Figure 8

Copyright © 2008 Tyco Flow Control. All rights reserved.

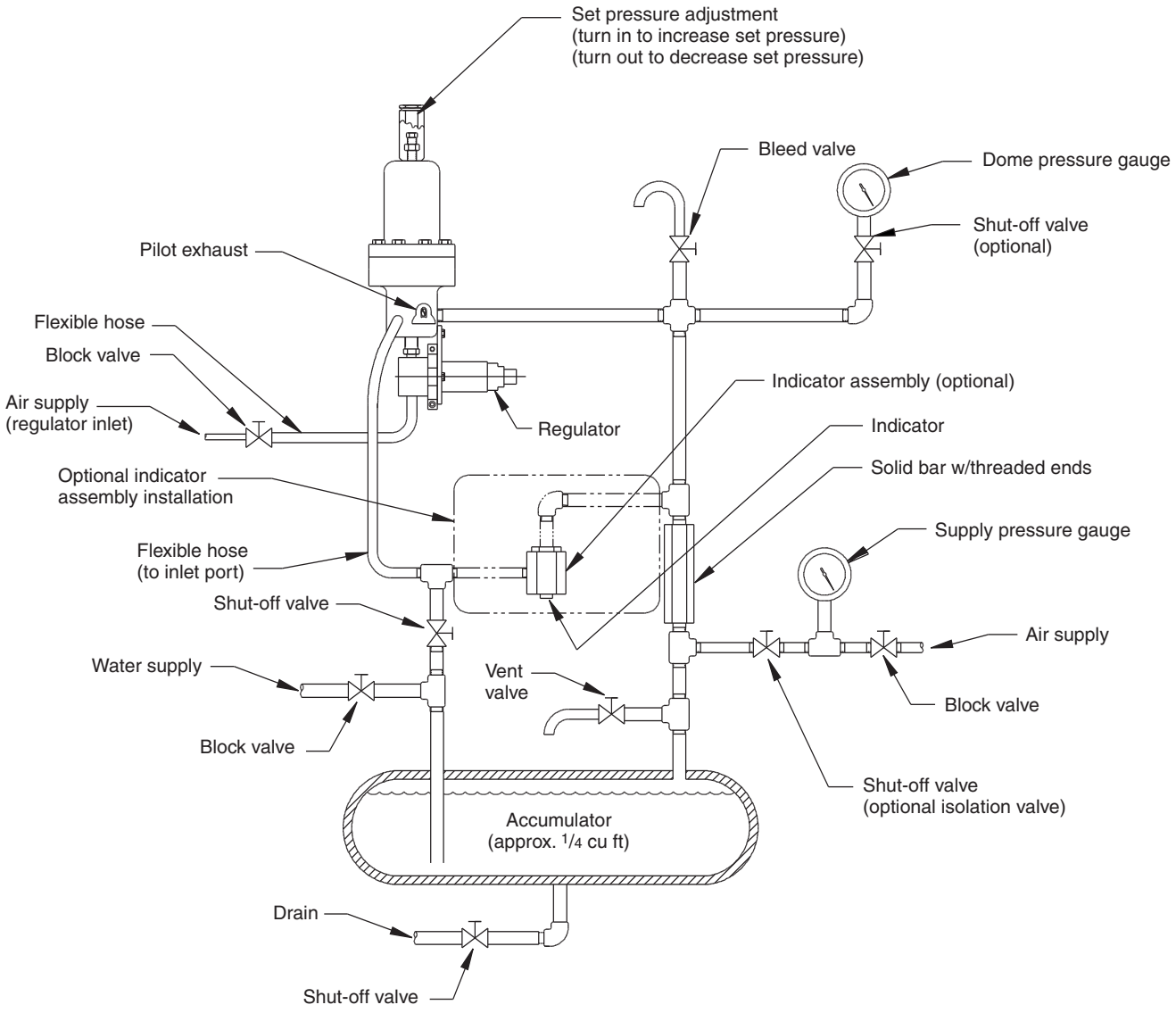

Figure 9

Copyright © 2008 Tyco Flow Control. All rights reserved.

5.0 Valve assembly testing

5.1 General

The complete valve assembly should be tested for internal and external leakage and to verify set pressure using a test set-up similar to that shown in Figures 10, 11, or 12. The test media should be air.

CAUTION: Do not test liquid service valves using water or other liquid test media. Liquid service valves should be tested using air as the test media in accordance with the procedures described below. Testing fully assembled liquid service valves using air ensures that no water or other liquid will remain in the main valve dome after final valve testing.

5.2 Low pressure leakage check

NOTE: For valve with Iso-Dome pilot, apply regulator supply pressure equal to a minimum of 200 psi greater than 92% of set pressure.

5.2.1 Valve for gas service or valve with Iso-Dome pilot

Slowly increase the supply pressure to 30% of set pressure. Check for main valve nozzle, seat, and piston seal leakage at the main valve outlet. To help in seating the valve seat and piston seal, the valve may be actuated several times. No leakage shall occur in 15 seconds.

5.2.2 Valve for liquid service

Slowly increase supply pressure to 30% of set pressure. Check for main valve nozzle, seat, and piston seal leakage at the main valve outlet. To help in seating the valve seat and piston seal, the valve may be actuated several times. No leakage shall occur in 15 seconds. If leakage is detected at the valve outlet, note the leakage in bubbles observed in 15 seconds and remove the leakage test device from the outlet flange. With the same supply pressure applied to the valve inlet, use a bubble test leak detector to measure leakage through the pilot exhaust. Low pressure leakage performance is acceptable if the leakage at the main valve outlet is equal to the pilot exhaust leakage and this leakage value does not exceed 15 bubbles in 15 seconds.

Liquid service valve with Iso-Dome pilot should be tested per paragraph 5.2.1.

5.3 High pressure leakage check

NOTE: For valve with Iso-Dome pilot, apply regulator supply pressure equal to a minimum of 200 psi greater than 92% of set pressure.

5.3.1 Valve for gas service or valve with Iso-Dome pilot

Apply supply pressure to the inlet equal to 90% of the set pressure. Check for leakage at the main valve outlet. Using a suitable gas and air leak detector solution, check for leakage at the cap seal and other pressure connections. No leakage shall occur at the valve outlet and no visible leakage shall be detected at the cap seal or other pressure connections in one minute.

5.3.2 Valve for liquid service

Apply supply pressure to the inlet equal to 90% of the set pressure. Check for leakage at the main valve outlet. Using a suitable gas and air leak detector solution, check for leakage at the cap seal and other pressure connections. No leakage shall occur at the valve outlet and no visible leakage shall be detected at the cap seal or other pressure connections in one minute. If leakage is detected at the valve outlet, note the leakage in bubbles observed in one minute and remove the leakage test device from the outlet flange. With the same supply pressure applied to the valve inlet use a bubble test leak detector to measure leakage through the pilot exhaust. High pressure leakage performance is acceptable if the leakage at the main valve outlet is equal to the pilot exhaust leakage and this leakage value does not exceed 60 bubbles in one minute.

Liquid service valve with Iso-Dome pilot to be tested per paragraph 5.3.1.

Where superimposed back pressure is specified, the downstream or exhaust connections which are exposed to the back pressure shall be tested at 1.5 times the specified back pressure and all mechanical connections so pressurized will be checked for leaks. No visible leakage shall occur in one minute using a suitable gas and air leak detector solution.

Copyright © 2008 Tyco Flow Control. All rights reserved.

5.4 Main valve function check

CAUTION: This test must be performed at a slow rate of pressure increase to ensure that the main valve does not go into full lift. The pressure applied to the inlet is not to exceed 105% of nameplate set pressure.

After completing the high pressure leakage check of paragraph 5.3, verify main valve opening as follows. Remove the leakage test device from the outlet flange. Slowly increase the inlet pressure above 90% of set pressure. Continue increasing inlet pressure until an audible discharge at the valve outlet verifies main valve opening.

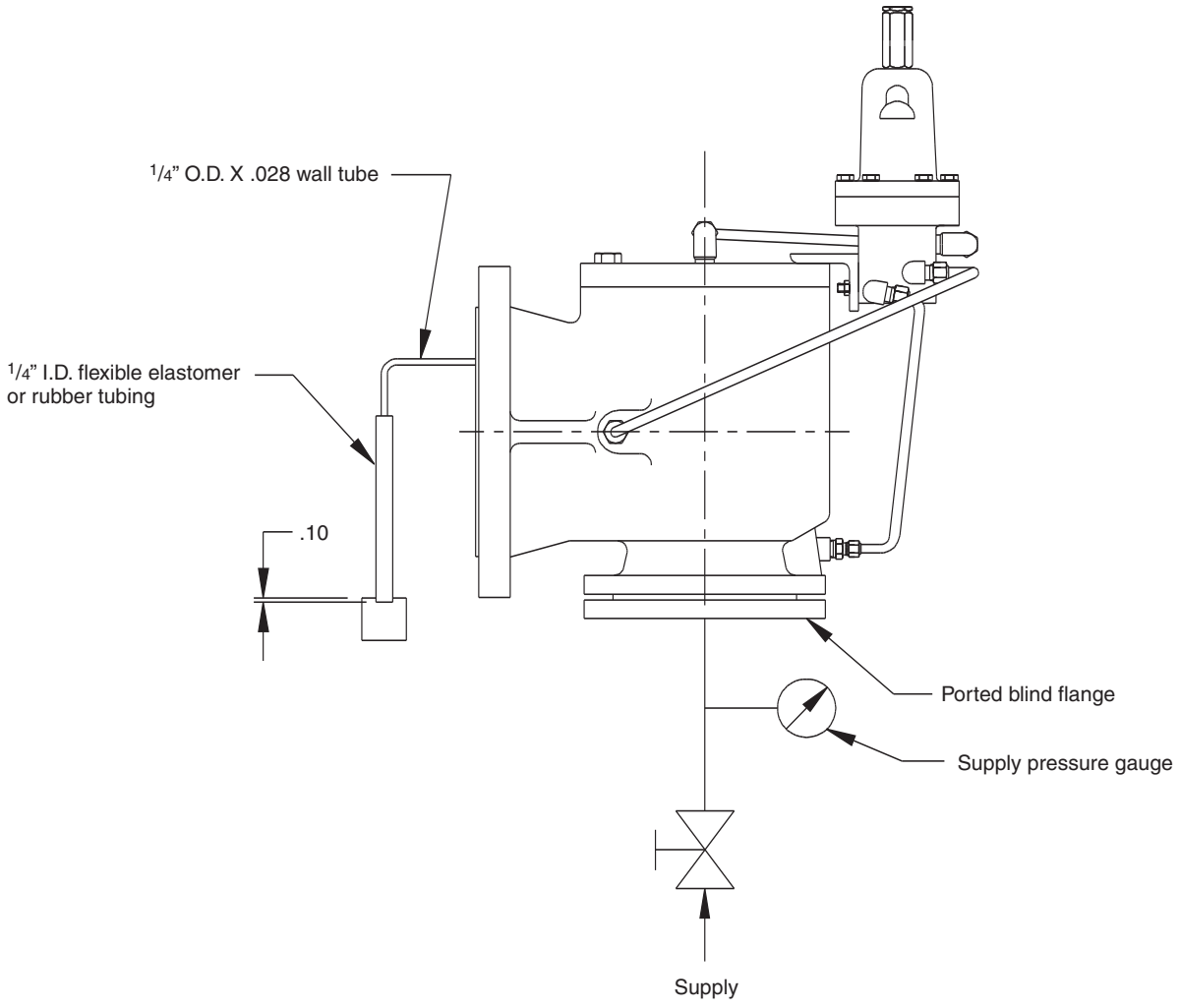

Figure 10
Test set-up for valve with standard pilot

Copyright © 2008 Tyco Flow Control. All rights reserved.

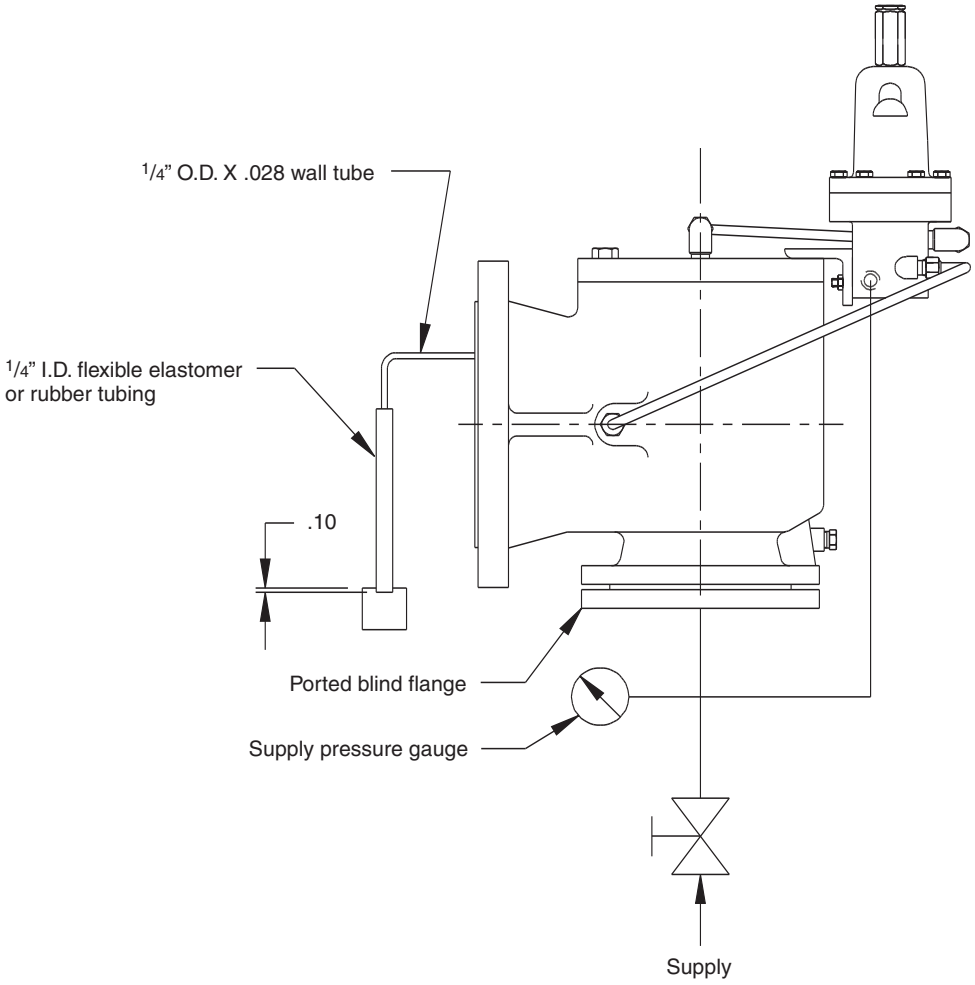

Figure 11
Test set-up for valve with remote sense pilot

Copyright © 2008 Tyco Flow Control. All rights reserved.

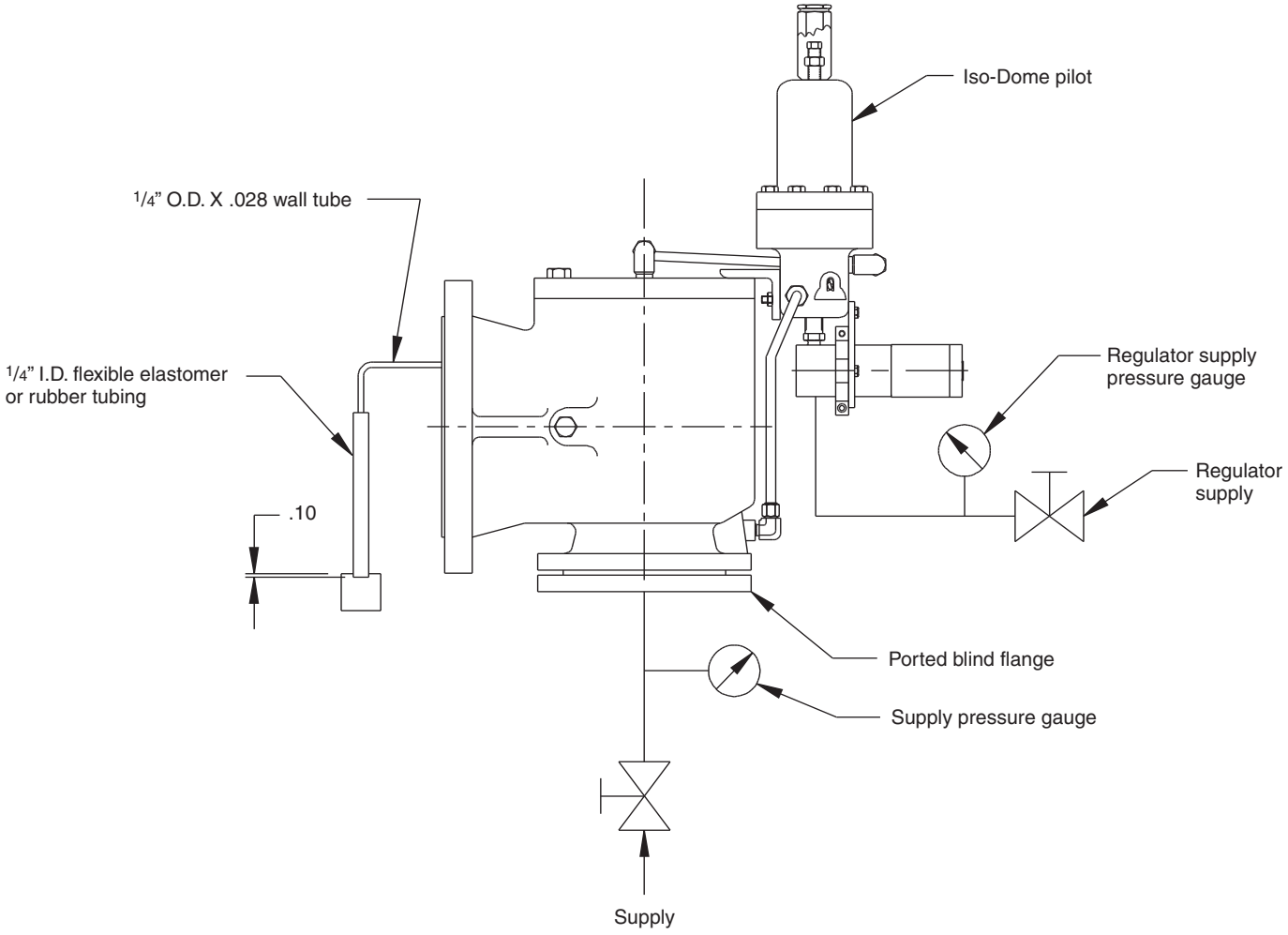

Figure 12
Test set-up for valve with Iso-Dome pilot

Copyright © 2008 Tyco Flow Control. All rights reserved.

5.7 Iso-Sense pilot operated pressure relief valve

In this special pilot operated pressure relief valve, the sense pressure applied to the pilot inlet/sense port is supplied from a remote source and the sense pressure media is isolated from the process media. The valve assembly is available for either a gas or liquid process media with either a gas or liquid sense media. The typical Iso-Sense Pilot Operated Pressure Relief Valve shown in Figure 13 below is presented for identification purposes only. This is a special pressure relief valve assembly which may require special set pressure adjustment procedures. Contact Anderson Greenwood for replacement parts and maintenance instructions for individual valve assemblies (serial number is required for complete identification).

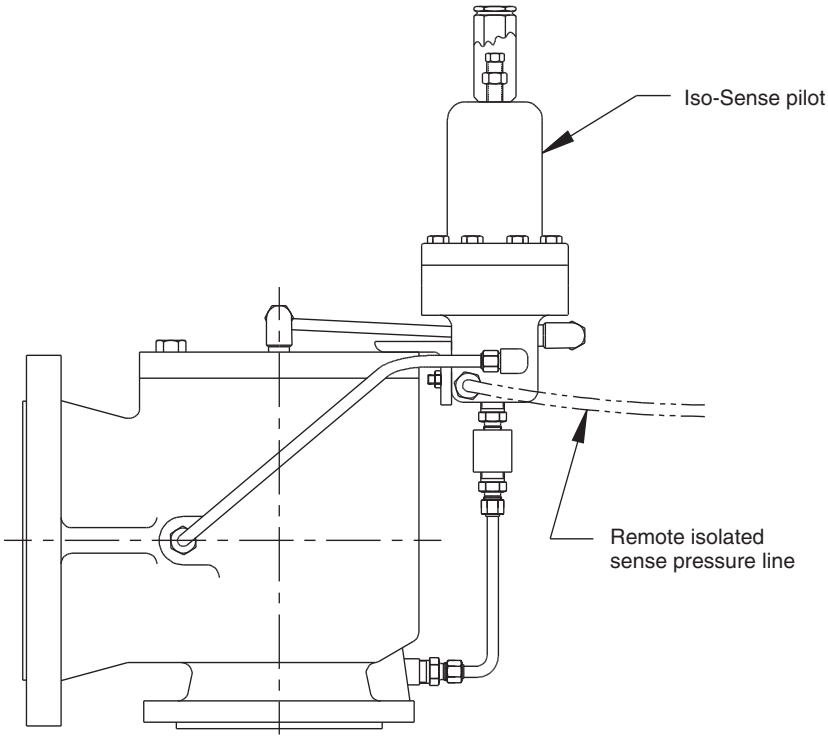

Figure 13
Iso-Dome pilot operated pressure relief valve

Copyright © 2008 Tyco Flow Control. All rights reserved.

6.0 Pilot set pressure field test procedure

6.1 General

CAUTION: If the pressure relief valve is not isolated from the process media while performing this test, the main valve will open if system pressure rises to set point or above.

The set pressure of valves equipped with a field test accessory can be checked with the valve installed, in operation. The field test accessory consists of a check valve in the pilot supply line through which test pressure from an external source can be supplied to the pilot. A test set-up similar to that shown in Figure 14 and procedure similar to the following should be used. This procedure accurately checks the set pressure; it does not provide an accurate check of reseat pressure.

NOTE: Gas flows through the Flexible Hose and vents past the indicator plunger to atmosphere when the plunger begins to retract. With gas flowing through the hose, there will be a pressure drop from the Gas Bottle to the field test fitting port. To ensure an accurate reading of set pressure, the Flexible Hose should be a 3/8" inside diameter hose and if the length exceeds 10-feet, the Test Gauge should be positioned at the Alternate Location (see Figure 14). If the test gas is supplied through a regulator, the effective orifice diameter of the regulator should be a minimum of 0.125-inch.

The main valve will not open while performing this field test as long as the process pressure remains below the set pressure. To cause the main valve to open, slowly increase the test pressure above the set pressure until the piston lifts and process media is discharged through the main valve. To close the main valve, close Block Valve "A" and open Vent Valve "C".

6.2 Procedure

A. Connect flexible hose from test Gas Bottle to field test fitting port.

B. Close Vent Valve "C".

C. Open Block Valve "A" slowly to increase pressure until the indicator actuates. The set pressure will be the pressure indicated on the Test Gauge at the time gas vents past the indicator plunger and/or the indicator plunger retracts (Test Gauge reading will decrease if rate of pressure increase is sufficiently slow).

   WARNING: Keep all parts of body clear of indicator plunger during test to avoid contact with gas venting past the indicator plunger.

D. To remove test set-up, close Block Valve "A", open Vent Valve "C", and remove flexible hose from field test fitting port.

Copyright © 2008 Tyco Flow Control. All rights reserved.

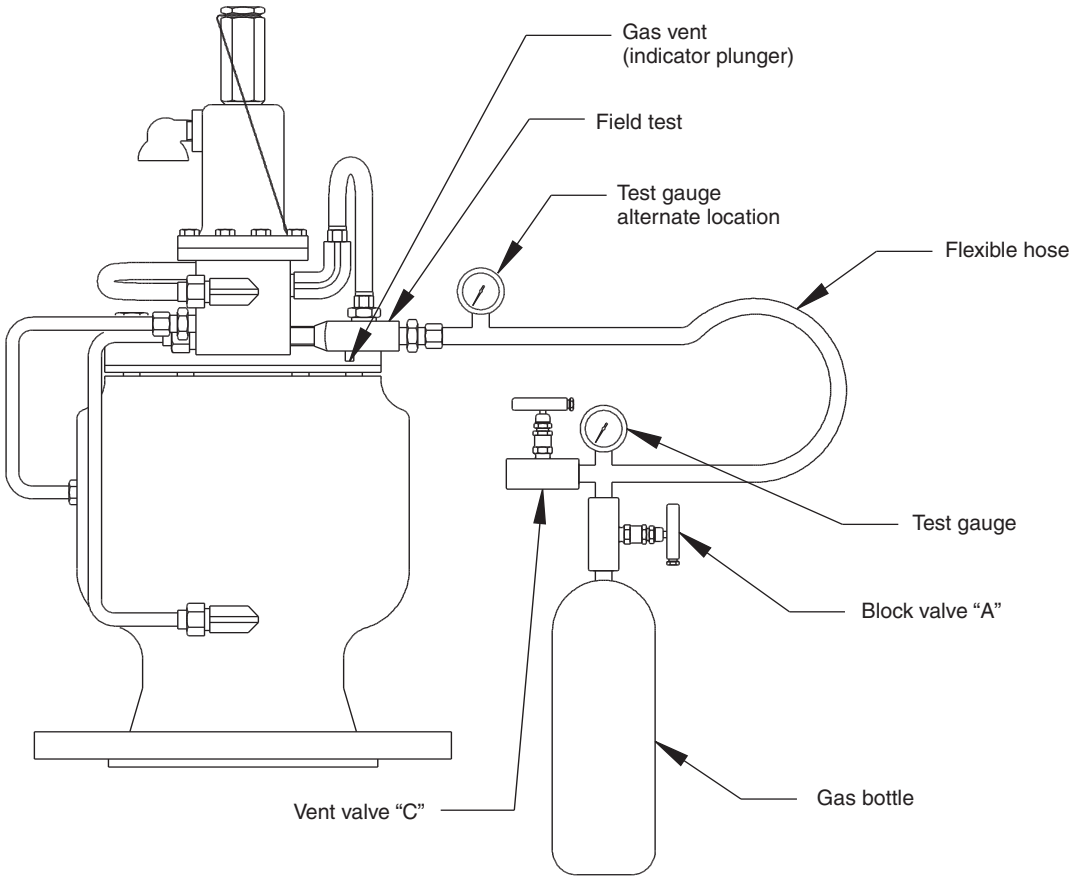

Figure 14

Copyright © 2008 Tyco Flow Control. All rights reserved.

7.0 Soft goods repair kits

The kits listed below are available from stock. Each kit contain all the seals and seats to repair a main valve or pilot and any required lubricants. Pilot kits also contain all the seals and seats for field test and backflow accessories. To order soft goods kits specify the base number and select the last three digits from the following tables. To ensure the correct soft goods kit is ordered, specify the valve model and serial number. For soft goods kits with elastomers other than those listed, contact Anderson Greenwood or an authorized representative.

7.1 Main valve – kit base number: 06.3365.XXX

Type 443/453

Material	1 x 2 1 1/2 x 2	1 1/2 x 3*	2 x 3	3 x 4	4 x 6	6 x 8	8 x 10
Urethane and BUNA-N seats, BUNA-N seals	001	002	003	004	005	006	007
Urethane and Viton® seats, Viton® seals	012	013	014	015	016	017	018
Urethane and EPR seats, EPR seals	141	142	143	144	145	146	147

*Also 1 1/2 x 2 threaded “G” and “H” orifice

Type 463

Material	1 1/2 x 2	2 x 3 2 x 3 x 3	3 x 4 3 x 4 x 4	4 x 6 4 x 6 x 6	6 x 8 6 x 8 x 8	8 x 8 x 8	8 x 10 8 x 10 x 10
Urethane and BUNA-N seats, BUNA-N seals	003	004	005	008	009	010	011
Urethane and Viton® seats, Viton® seals	014	015	016	019	020	021	022
Urethane and EPR seats, EPR seals	143	144	145	148	149	150	151

Type 449/459

Material	1 x 2 1 1/2 x 2	1 1/2 x 3*	2 x 3	3 x 4	4 x 6	6 x 8	8 x 10
Teflon® seat/seal (set press., psig)	200 (15-600)	201 (15-600)	202 (15-400)	203 (15-400)	204 (15-400)	205 (15-275)	206 15-275
SST filled Teflon® seat/Teflon® seal (set press., psig)	211 (601-1480)	212 (601-1480)	213 (401-1480)	214 (401-1480)	215 (401-1480)	216 (276-1480)	217 (276-1480

*Also, 1 1/2 x 2 threaded valve with “G” and “H” orifice.

Type 469

Material	1 1/2 x 2	2 x 3 2 x 3 x 3	3 x 4 3 x 4 x 4	4 x 6 4 x 6 x 6	6 x 8 6 x 8 x 8	8 x 8 x 8	8 x 10 8 x 10 x 10
Teflon® seat/seal (set press., psig)	202 (15-400)	203 (15-400)	204 (15-400)	207 (15-400)	208 (15-275)	209 (50-275)	210 (15-275)
SST fill Teflon® seat/Teflon® seal (set press., psig)	213 (401-1480)	214 (401-1480)	215 (401-1480)	218 (401-1480)	219 (276-1480)	220 (276-1480)	221 (276-1480)

Viton® is a registered trademark of DuPont Dow Elastomers.

Copyright © 2008 Tyco Flow Control. All rights reserved.

7.2 Pilot - (Includes seals for BFP and FT)

Material	100-1480 psig Piston Type
BUNA-N	06.2645.001
Viton®	06.2645.004
EPR	06.2645.007
AFLAS	06.2645.010
KALREZ	06.2645.013

7.3 Accessories - (Supply filter kit includes filter screen)

Material	Accessory	Kit
BUNA-N	Spike Snubber	04.6419.012
Viton®	Spike Snubber	04.6419.013
Teflon®/SST	Supply Filter	04.6419.014

Copyright © 2008 Tyco Flow Control. All rights reserved.

8.0 Pilot accessories

8.1 Lift lever conversion kits

Pilot Set Pressure	Kit Part No.
100-500 psig	06.3416.001
501-1480 psig	06.3416.002

9.0 Assembly and maintenance equipment

9.1 Nozzle removal and installation spacer kits

Description	Kit Part No.
All Sizes and Types	06.3362.001
1” – 3” All Types	06.3362.002
4” – 8” All Types	06.3362.003
All sizes and types except without Series 500	06.3362.004
1” – 3” All types except without Series 500	06.3362.005

9.2 Lift stop setting gauge kits

Description	Kit Part No.
All sizes and types all services	06.3352.001
All sizes and types gas service only	06.3352.002

9.3 Pilot test stands

Description	Kit Part No.
Multiple configurations available	Contact Anderson Greenwood
Indicator assembly for liquid service pilots	01.4434.001

www.tycoflowcontrol.com

Tyco Flow Control (TFC) provides the information herein in good faith but makes no representation as to its comprehensiveness or accuracy. This IOM is intended only as a guide to TFC products and services. Individuals using this IOM must exercise their independent judgment in evaluating product selection and determining product appropriateness for their particular purpose and system requirements. TFC MAKES NO REPRESENTATIONS OR WARRANTIES, EITHER EXPRESS OR IMPLIED, INCLUDING WITHOUT LIMITATION ANY WARRANTIES OF MERCHANTABILITY OR FITNESS FOR A PARTICULAR PURPOSE WITH RESPECT TO THE INFORMATION SET FORTH HEREIN OR THE PRODUCT(S) TO WHICH THE INFORMATION REFERS. ACCORDINGLY, TFC WILL NOT BE RESPONSIBLE FOR DAMAGES (OF ANY KIND OR NATURE, INCLUDING INCIDENTAL, INDIRECT, OR CONSEQUENTIAL DAMAGES) RESULTING FROM THE USE OF OR RELIANCE UPON THIS INFORMATION.
Patents and Patents Pending in the U.S. and foreign countries. Tyco reserves the right to change product designs and specifications without notice.

Engineering Doc. #05.9040.270 Rev. H

Copyright © 2008 Tyco Flow Control. All rights reserved.